GB **RSA Hz PRO**

Radio receiver for rolling garage door

5064942D

Read carefully these instructions before any use.

S.A.S. au capital de 5 000 000 € - Z.I. Les Giranaux - BP71 - 70103 Arc-Les-Gray CEDEX - FRANCE - RCS VESOUL B 425 650 090 - SIRET 425 650 090 00011 - n° T.V.A CEE FR 87 425 650 090

CE Hereby SIMU declare that this equipment "RSA Hz PRO" is in compliance with the essential requirements and other relevant provisions of directive1999/5/EC. A declaration of conformity is available at the web adress: www.simu.fr - Usable in UE, CH

1 Technical data

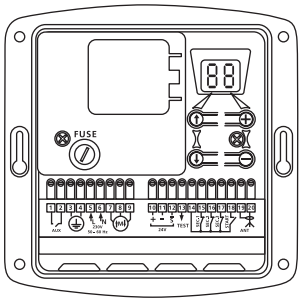

- Power supply voltage: 230Vac 50 Hz.
- Fuse: 250V 6,3AT with timeout
- Max motor power: 230Vac 1200W.
- Protection rating: IP 44.
- Ambient operating T°: -15°C à +55°C.
- Radio frequency: 433,42MHz
- Accessory power supply: 24Vcc (direct).
- Resistance values for resistive sensor bar: From 5 to 14 KOhm
- Maximum current for accessories (cells, keypads, loops, sensor bar, etc…): 0.33A i.e. 8W max. or 13W intermittent (orange light 10W + accessories 3 W).
- Orange light: 24V, 10W max ou 230V 40W max
- Area lighting: 230Vac, 500W.
- Auxiliary output: Contact NO, 250Vac 500W.
- Operating class: 1, the ground must be connected.
- Box dimension: 150 x 150 x 40 mm

- The RSA Hz PRO receiver is used to control an industrial or commercial door fitted with a 230V motor with built-in endstops using TSAHz 2 channels and TSAHz 4channels transmitters and Simu Hz transmitters. Different safety and signaling systems can be connected to the RSA Hz PRO (safety edge, photocells, flashlights,area lighting).
- This product complies with recognized technical standard and safety regulation. When carrying out wiring and installation work, always refer to current standards. This contributes to implementing installations complying with the standard "safety in using motorised doors" NF EN 12453. RSA Hz PRO must be installed indoor with a motor equipped by a manual override system.
- Any assistance required on automation components must be carried out by qualified technician.

2 Wiring

Example of installation (wire section : 0,75mm²)

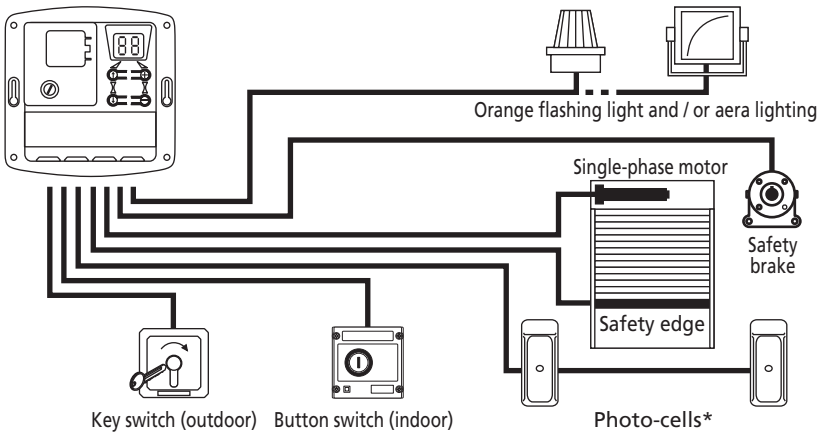

Apply the electric installation standards, as well as the following points:
- Switch off the mains before any intervention.
- Use flexible cables.
- Connect the ground cables.
- After installation, no traction must be applied to the terminal strips.

* Possibility of wiring a second photocell between terminals 14 and 17.

Wiring of a single-phase motor

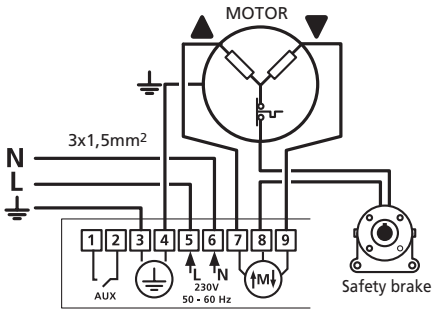

Wiring of a safety edge
Security auto-test mandatory

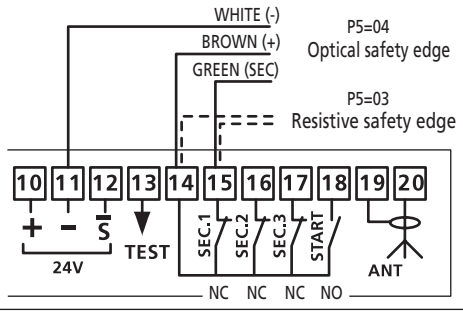

Wiring of lighting or sign (230V - 500W max.)

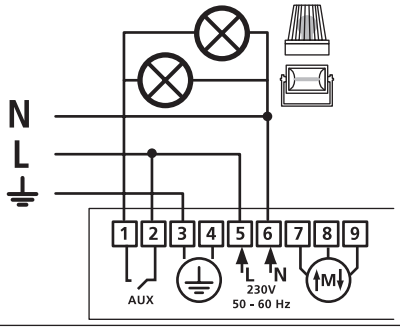

Wiring of photo-cells

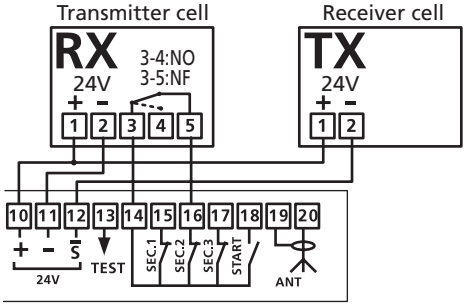

Wiring of sequential control switches

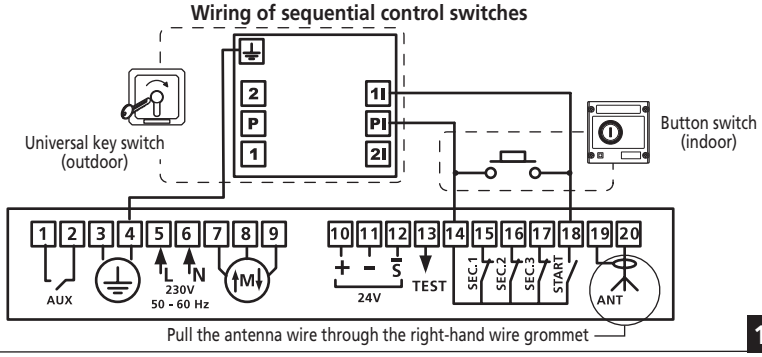

3 Checking the motor's rotation direction

3.1- Powering on the product: the display indicates the value C1
3.2- Check the motor's rotation direction using the ⊕ et ⊖ keys

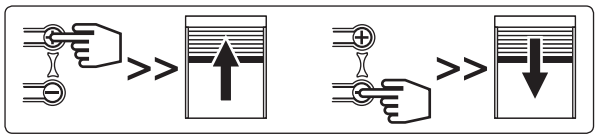

- Press and hold the key ⊕ to open the door.
- Press and hold the key ⊖ to close the door.

- If the operation is reversed, power off the product, and revert the motor's wiring (terminals 7 and 9).
- **Refer to the motor's installation manual to set the end stop system.**

3.3- Measure the motor operating time using permanent running (e.g. 20sec. for rising), then set the parameter t0 with a value slightly above (+4 sec.) the time observed (t0 : Motor operating time from 00 to 80, 2 sec. increments)

4 Parameters

The default modes correspond to the main part of installations and uses of roller garage doors.Nevertheless, the RSA Hz PRO control box can be completely and easily programmed in order to obtain a personalized working according to the accessories connected and the specific working mode desired by the user.

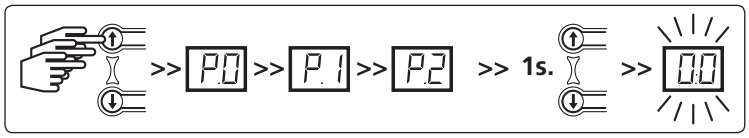

- Use the ⊕ and ⊖ keys to browse the menu and display the parameter required. One second after releasing the key, the screen indicates the parameter value to change. (display blinks).

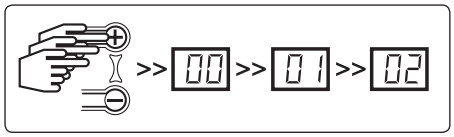

- Use the ⊕ and ⊖ keys to change the value of the parameter. The last value is recorded automatically (the display is fixed when pressing the keys).

- To return to the menu, press the ⊕ or ⊖ to return to value C1 (or any other value indicating the product's operation: see § 5) or after a one-minute waiting time.

4.1- Configuring the operating mode: Parameter P0 (factory setting = 05)
- Certain operating modes impose connecting safety accessories (NF EN 12453). Non compliance with these rules can lead to a facility hazardous for its users.

RSA Hz PRO has six operating modes:

P0 - 00 **: Automatic mode:** Pressing the remote control opens and closes automatically after timeout t1. During closing, pressing the remote control again or the detection of an obstacle reopens the door.

- t1 : Closing time of the door (00 to 99, 1sec. increments)

⚠ **Mandatory installation of safety accessories.**

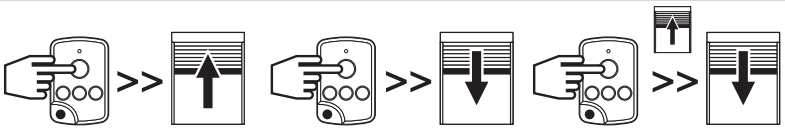

P0 - 01 **: Semi-automatic mode:** Pressing the control triggers opening or closing. Pressing again during opening has no effect. Pressing during closing reopens the door.

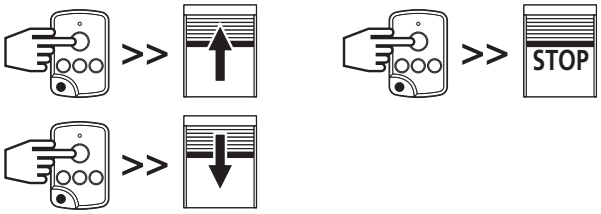

P0 - 02 **: Sequential mode:** Cyclic operation (up / stop / down / stop...). Pressing during opening or closing stops without reversion.

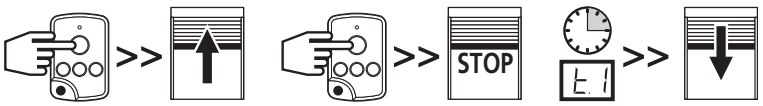

P0 - 03 **: Sequential mode + Timeout:** Similar to the sequential mode, but with automatic closing aftert timeout t1.

- t1 : Closing time of the door (00 to 99, 1sec. increments)

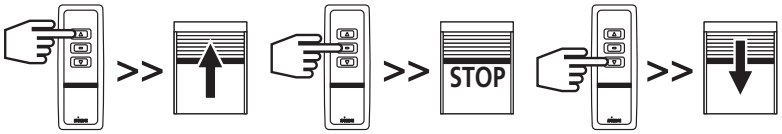

P0 - 04 **: 3-button mode:** This mode is used to set separate controls for opening, closing, and stopping the door.

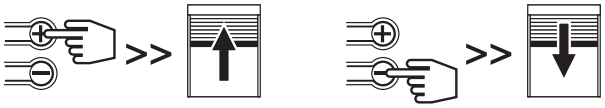

P0 - 05 **: Forced mode with the ⊕ and ⊖ keys on the keyboard (default mode):** This mode is used to control the door using the ⊕ and ⊖ keys on the RSA Hz PRO box in the endstop adjustment phase.
- Press and hold ⊕ to open the door.
- Press and hold ⊖ to close the door.

⚠ **In this mode, the safety devices are not activated**

4.2- Safety input function: Parameters P1 P2 P3

- When using a resistive safety edge, the latter must be wired onto safety input 1. The opening safety device (P1 P2 P3 = 01) stops then recloses partially (non configurable action).

Configuration of safety input 1 (safety edge*): Parameter P1 (factory setting = 00)

P1	00	No accessories connected to safety input 1 (default mode)	P1	03	ADMAP** safety: active upon closing + forbids starting at opening
P1	01	Accessory connected to safety input 1 enabled when opening the door	P1	04	Contact for connecting an emergency stop device
P1	02	Accessory connected to safety input 1 enabled when closing the door			

Configuration of safety input 2 (photocell*): Parameter P2 (factory setting = 00)

P2	00	No accessories connected to safety input 2 (default mode)	P2	03	ADMAP** safety: active upon closing + forbids starting at opening
P2	01	Accessory connected to safety input 2 enabled when opening the door	P2	04	Contact for connecting an emergency stop device
P2	02	Accessory connected to safety input 2 enabled when closing the door			

Configuration of safety input 3: Parameter P3 (factory setting = 00)

P3	00	No accessories connected to safety input 3 (default mode)	P3	03	ADMAP** safety: active upon closing + forbids starting at opening
P3	01	Accessory connected to safety input 3 enabled when opening the door	P3	04	Contact for connecting an emergency stop device
P3	02	Accessory connected to safety input 3 enabled when closing the door			

4.3- Safety action upon closing: Parameter P4 (factory setting = 01)

- The safety action at opening (P1 P2 P3 = 01) is not configurable (stopage followed with partial door reopening). However, safety actions upon closing (P1 P2 P3 = 02) can be configured.

P4	00	Stop the door	P4	01	Stop, then total reopening of the door (default mode)	P4	02	Stop then partial reopening of the door(2 seconds operation)

⚠ **Ensure you configure the safety input used for the appropriate self-test: safety 1: P1+P5, safety 2: P2+P6, safety 3: P3+P7 Once the safety accessories are connected and the safety inputs configured, check manually the proper operation of the accessories before the final start up of the facility.**

4.4- Configuration of the self-testing function: Parameters P5 P6 P7

- The self-test function is used to check proper operation of the safety accessories automatically at the end of closing.

Self-testing safety input 1: Parameter P5 (factory setting = 00)

⚠ If a safety edge is connected, the security auto-test is mandatory!

P5	00	No self-test of the accessory connected (default mode)	P5	03	Self-test for resistive sensor bar (value comprised between 4 and 12 KΩ
P5	01	Self-test for photocells by power supply cutting. **Caution** : The transmitting cell must be supplied on terminals 10/12 and the receiver cells on terminals 10/11).	P5	04	Self-test for optical sensor bar
P5	02	Self-test for accessory fitted with a TEST input (cells or sensor bar).			

Self-testing safety input 2: Parameter P6 (factory setting = 00)

P6	00	No self-test of the accessory connected (default mode)	P6	02	Self-test for accessory fitted with a TEST input (cells or sensor bar).
P6	01	Self-test for photocells by power supply cutting. **Caution** : the transmitting cell must be supplied on terminals 10/12 and the receiver cells on terminals 10/11).			

Self-testing safety input 3: Parameter P7 (factory setting = 00)

P7	00	No self-test of the accessory connected (default mode)	P7	02	Self-test for accessory fitted with a TEST input (cells or sensor bar).
P7	01	Self-test for photocells by power supply cutting. **Caution :** the transmitting cell must be supplied on terminals 10/12 and the receiver cells on terminals 10/11) :			

4.5- Programming remote controls : Parameter P8

- According to the type of operation chosen in chapter 3.1, the value of the P8 parameter does not produce the same effects.

Sequential mode P0 02

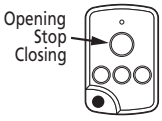

P8	00	Opening / Closing Command (default mode).
P8	03	Auxiliary output control (driving the accessory connected to the AUX output).

Select parameter P8 by pressing several time on the key From the release of the key, the display indicates 00 and flashes.
- For programming the "UP / STOP / DOWN" order, select using the key or the functionality 00 then program the key associated with this order.
- For programming the auxilliary output order, select using the key or the functionality 00 then program the key associated with this order.

3 buttons mode P0 04

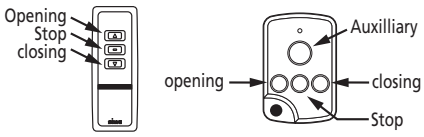

P8	00	Open command
P8	01	Close command
P8	02	Stop command
P8	03	Auxiliary output control (driving the accessory connected to the AUX output).

Select parameter P8 by pressing several time on the key From the release of the key, the display indicates 00 and flashes.
- For programming the "UP" order, select using the key or the functionality 00 then program the key associated with this order.
- For programming the "DOWN" order, select using the key or the functionality 01 then program the key associated with this order.
- For programming the "STOP" order, select using the key or the functionality 02 then program the key associated with this order.
- For programming the auxilliary output order, select using the key or the functionality 03 then program the key associated with this order.

4.5.1- Choose the remote control key's function to program:
- Display the value of the function to program using ⊕ and ⊖ keys on the RSA Hz PRO.

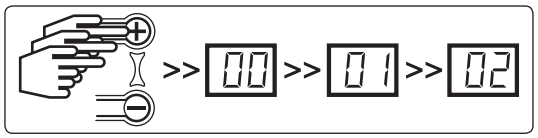

4.5.2- Save the channel (RSA Hz PRO can save maximum 32 channels):
- Press simultaneously the remote control key to program and the key ⊕ on the RSA Hz PRO for three seconds until dashes -- appear

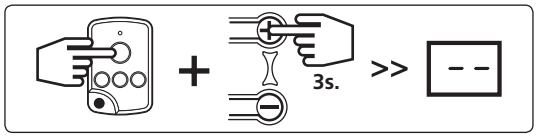

- The RSA Hz PRO can be controlled in the three-button mode using a reverter with three keys wired onto the START,SEC2, and SEC3 inputs (if the latter are configured "non wired": chapter 4.2).

4.6- Clearing remote controls: Parameter P9 (factory setting = 04)
- Clearing all remote controls is performed by pressing and holding for 3 seconds the key ⊕ until dashes -- appear.

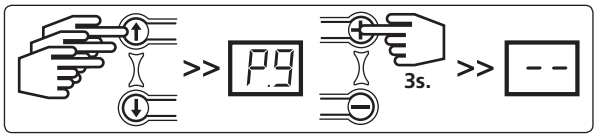

4.7- Configuration of auxiliary accessories: Parameter PA (valeur usine = 04)
- The auxiliary contact is a dry contact. A single accessory can be connected and power supplied according to the use configured.

PA 00	Contact to drive an electric latch (The latch must be supplied with an outside power supply)	PA 04	Contact to drive a zone lighting (default mode, automatic switch off after timeout T3 - §4.8)
PA 01	Contact to drive an electromagnetic latch	PA P5	Contact to drive an open door indicator
PA 02	Contact to drive an Orange flashlight without notice (only during the door's operation)	PA P6	Contact of the stable mono relay type to drive an automation system
PA 03	Contact to drive an Orange flashlight with notice (before starting and during the door's operation)	PA P7	Contact of the unstable relay type to drive an automation system

4.8- Configuring the operating time: Parameters t0 - t3)

- t0 : Motor operating time (factory setting = 80 = 160 seconds)
  00 > 80 (increments of 2 sec.) Adjust a time slightly longer than the actual operating time (opening time + 4s.).

- t1 : Time for reclosing the door (valeur usine = 05)
  00 > 99 (increments of 1 sec.) Enabled in automatic operating mode (§ 4.1).

- t2 : Delay time before motor reversion (factory setting = 05) **Check that the value of the parameter t2 is equal to 00**
  00 > 30 (increments of 1 sec.) Particular case of motors not accepting reversion of the rotation direction without stopping phase.

- t3 : Area lighting time after cycle end (factory setting = 02)
  00 > 10 (increments of 1 minute.)

To return to the menu, press the ⇧ and ⇩ keys to return to value C1 (or any other value indicating the product's operation: see §5) or after a one-minute waiting time.

5 Operating information

List of operating information displayed by RSA Hz PRO used to view and an easy diagnostic of the facility's status.

Event codes:

C1	Waiting for a command	C7	ADMAP* cell hidden
C2	Opening door in progress	C8	Door movement forced by keypad
C3	Delay before closing door	C9	Emergency stop triggered
C4	Closing door in progress	CA	Safety Self-testing
C5	Opening cell hidden	Cb	Permanent contact on "START" input
C6	Closing cell hidden	CC	Delay before motor reversion

Default codes:

E1	Safety fault at opening (contact always open)	E5	Self-test failed on safety input 2
E2	Safety fault at closing (contact always open)	E6	Self-test failed on safety input 3
E3	ADMAP* safety fault (contact always open)	E7	Intensity exceeded on 24V power supply (too many accessories connected)
E4	Self-test failed on safety input 1	E8	Operating time "T0" too short or motor endstop not reached

Log of the last 10 faults: d0 d9 : See fault code above.
Cycles counter: U0 Tens and units, U1 Thousands and hundreds, U2 Hundred and tens of thousands, (example : U2 00 U1 52 U0 49 = 5249 cycles).
Accessories consumption: U3 **:** Puissance consommée en watts de 00 à 99
Reset of the RSA Hz after a fault: To clear the fault codes, select the parameter dd then press and hold the ⊕ key for 3 seconds until dashes -- appear.

- For the fault codes from E1 to E3 : Once the fault is corrected, it is not required to clear the fault code of the log to return to normal operation.

- For the fault codes from E4 to E8 : Once the fault is corrected, you must clear the defect code for the log to return to normal operation.

*If the connection of accessories matches the diagram in chapter 1.
**Area Dangerous for Movement Accessible to the Public.